YH-59-02-02

REV.	ECN NO.	DATE

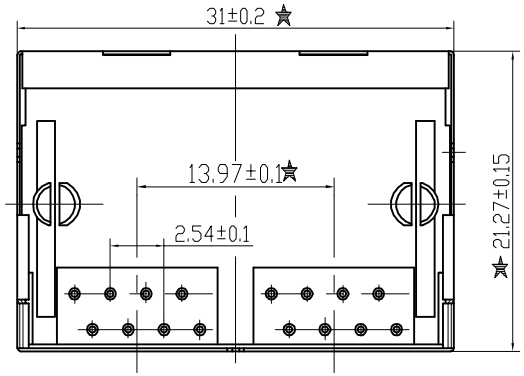

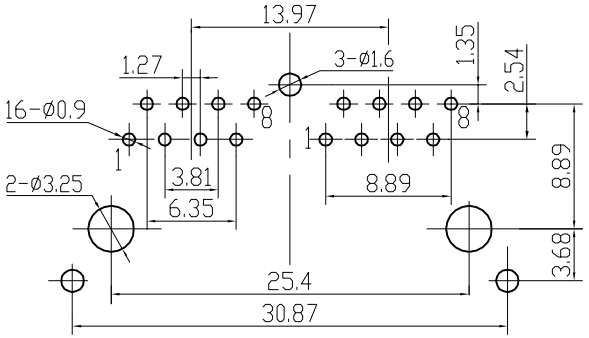

PCB LAYOUT

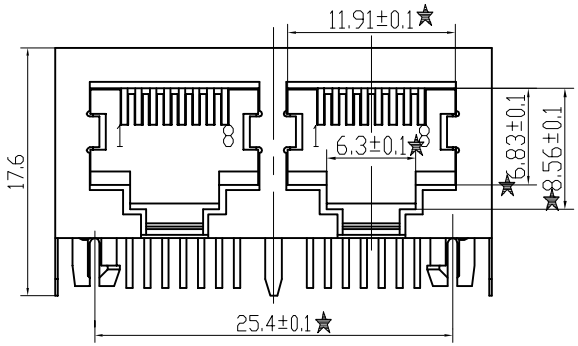

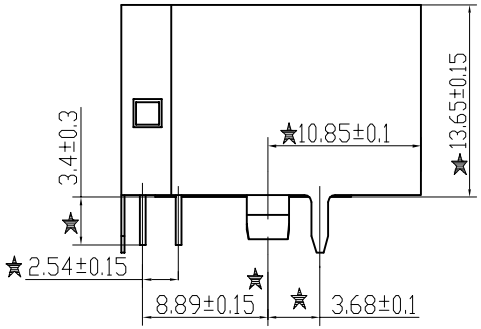

NOTE:
1. ELECTRICAL:
 1.1 VOLTAGE RATING: 125 VAC RMS;
 1.2 CURRENT RATING: 1.5 AMP;
 1.3 CONTACT RESISTANCE: 20 MILLIOHMS Max;
 1.4 INSULATION RESISTANCE: 1000 MEGOHMS Min @500 VDC;
 1.5 DIELECTRIC STRENGTH: 1000 VAC RMS 50 or 60Hz 1 Minute;
2. MECHANICAL:
 2.1 HOUSING: PBT, UL94V-0, BLACK;
 2.2 INSERT:PBT, UL94V-0, BLACK;
 2.3 TERMINALS: DIA 0.46 PHOSPHOR BRONZE PLATED 3u" Au;
 2.4 SHIELD:H65Y
 2.5 DURABILITY: 750 CYCLES Min.
3.★Critical dimension.

RoHS Compliant

C N T 肯耐特电子有限公司				TOLERANCES 0~15±0.15, 15~30±0.2, 30~±0.25 ANGLE±1°.	MATERIAL: SEE NOTE	Designed:	NAME: 5921-S-B 双胞
FIRST ANGLE PROJECTION	A4 SIZE	SCALE 2:1	UNIT mm	CUSTOMER:	FINISH: SEE NOTE	Checked:	DWG NO.: C07082801 REV
				MODEL NO.:	SHEET 1 OF 1	Approved:	PART NO.: 00