Pitch:2.00mm (0.079″)

Single Row Female Header Straight Dip Type

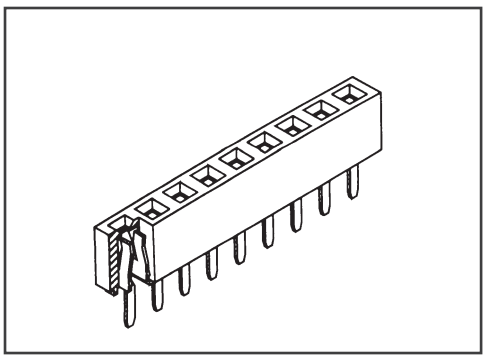

SPECIFICATIONS

Current Rating:2.0 Amps
Insulator resistance:1000 Megohms Min.
Dielectric withstanding:AC 500 V
Contact Resistance:20 Megohms Max
Operating Temperature:-40° C - +105° C

MATERIALS

Contact Material:Copper Alloy
Insulator Material:NYLON-6T UL94V-0
Finish:Gold/Tin Plated

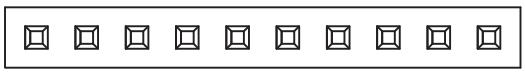

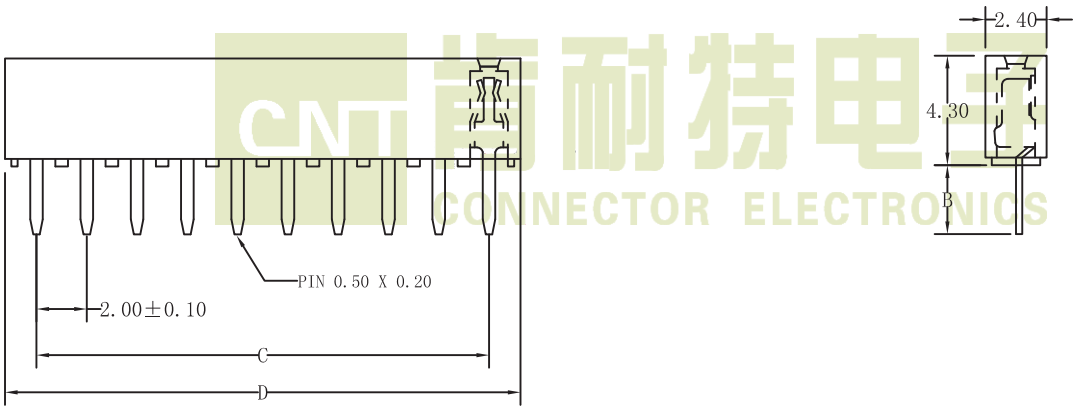

CNT 南耐特电子 CONNECTOR ELECTRONICS

Recommended P.C.Board
Hole Layout

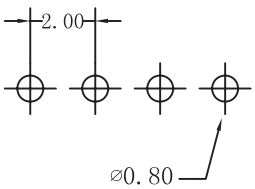

No. of Pins Per Row		02~40
Dimension		
C	2.00*No.of Contacts-2.0	±0.20
D	2.00*No.of Contacts+0.6	±0.25

Ordering Information

F	200	1	*	XX	G	S	430	B
F: Female	Pitch: 2.00mm	1: Single Row		No. of pins per Row	G: GoldPlated T: Tin Plated	S: Straight	Plastic Height	2.4mm Customer Length Available